Combined Wind Sensor WMS301 and WMS302

USER'S GUIDE

M210375en-A
December 2002

VAISALA

PUBLISHED BY

Vaisala Oyj
P.O. Box 26
FIN-00421 Helsinki
Finland

Phone (int.): +358 9 8949 1
Fax: +358 9 8949 2227

Visit our Internet pages at http://www.vaisala.com/

© Vaisala 2002

No part of this manual may be reproduced in any form or by any means, electronic or mechanical (including photocopying), nor may its contents be communicated to a third party without prior written permission of the copyright holder.

The contents are subject to change without prior notice.

Please observe that this manual does not create any legally binding obligations for Vaisala towards the customer or end user. All legally binding commitments and agreements are included exclusively in the applicable supply contract or Conditions of Sale.

Table of Contents

CHAPTER 1
GENERAL INFORMATION 3
About This Manual 3
Contents of This Manual 3
Version Information 4
Feedback 4
Safety 4
General Safety Considerations 4
Product Related Safety Precautions 5
ESD Protection 5
Regulatory Compliances 6
Warranty 6

CHAPTER 2
PRODUCT OVERVIEW 7
Introduction to WMS Series Wind Sensors 7
Product Nomenclature 9

CHAPTER 3
INSTALLATION 11
Selecting Location 11
Connector 12
Installation Procedure 14
Initial Check 14
Mounting 16
Mounting Sensor to the Wind Sensor Mast 16
Mounting to a Pole Mast with WMS30KIT 17
Aligning the Sensor 19

CHAPTER 4
MAINTENANCE 21
Periodic Maintenance 21
Testing Proper Operation 21
Replacing Consumables 21
Parts List for Consumables 24

CHAPTER 5
TROUBLESHOOTING 25
Common Problems 25
Technical Support 25
Return Instructions 26

CHAPTER 6
TECHNICAL DATA 27
Specifications 27
Dimensions 29
MTBF 29
MTTR 29

List of Figures

Figure 1 WMS Series Combined Wind Sensor 8
Figure 2 Recommended Mast Location in Open Area 11
Figure 3 Recommended Mast Length on the Top of a Building 12
Figure 4 WMS301 Connector 13
Figure 5 WMS302 Connector 13
Figure 6 WMS301 Principal Circuit Diagram 14
Figure 7 WMS302 Principal Circuit Diagram 15
Figure 8 WMS302 Factory Alignment (Models with the Alignment Sleeve) 15
Figure 9 Mounting of the Combined Wind Sensor 16
Figure 10 WMS301/WMS302 Installation with WMS30KIT 18
Figure 11 Aligning the Combined Wind Sensor 19
Figure 12 WMS Assembly 23
Figure 13 Dimensions (in mm) of the Combined Wind Sensor 29

List of Tables

Table 1 Manual Revisions 4
Table 2 WMS Series Wind Sensor Nomenclature 9
Table 3 Available Spare Parts 24
Table 4 Some Common Problems and their Remedies 25
Table 5 Anemometer Specifications 27
Table 6 Vane Specifications 28
Table 7 Common Specifications 28

CHAPTER 1

GENERAL INFORMATION

This chapter provides general notes for the product.

About This Manual

This manual provides information for installing, maintaining, and troubleshooting WMS301 and WMS302 Combined Wind Sensor.

Contents of This Manual

This manual consists of the following chapters:

- Chapter 1, General Information, provides general notes for the product.
- Chapter 2, Product Overview, introduces the WMS301 and WMS302 Combined Wind Sensor features.
- Chapter 3, Installation, provides you with information that is intended to help you install the wind sensor.
- Chapter 4, Maintenance, provides information that is needed in basic maintenance of the product.
- Chapter 5, Troubleshooting, describes common problems, their probable causes and remedies, and contact information.

- Chapter 6, Technical Data, provides the technical data of WMS301 and WMS302 Combined Wind Sensor.

Version Information

Table 1 Manual Revisions

Manual Code	Description
M010030en-C	WMS301 & WMS302 Combined Wind Sensors Quick Reference Guide
M210375en-A	First version of the WMS301 and WMS302 Combined Wind Sensor User's Guide. Replaces the above mentioned Quick Reference Guide.

Feedback

Vaisala Customer Documentation Team welcomes your comments and suggestions on the quality and usefulness of this publication. If you find errors or have other suggestions for improvement, please indicate the chapter, section, and page number. You can send comments to us by e-mail: manuals@vaisala.com

Safety

General Safety Considerations

Throughout the manual, important safety considerations are highlighted as follows:

WARNING	Warning alerts you to a serious hazard. If you do not read and follow instructions very carefully at this point, there is a risk of injury or even death.

CAUTION	Caution warns you of a potential hazard. If you do not read and follow instructions carefully at this point, the product could be damaged or important data could be lost.

NOTE	Note highlights important information on using the product.

Product Related Safety Precautions

The device delivered to you has been tested for safety and approved as shipped from the factory. Note the following precautions:

WARNING	Ground the product, and verify outdoor installation grounding periodically to minimize shock hazard.

CAUTION	Do not modify the unit. Improper modification can damage the product or lead to malfunction.

ESD Protection

Electrostatic Discharge (ESD) can cause immediate or latent damage to electronic circuits. Vaisala products are adequately protected against ESD for their intended use. However, it is possible to damage the product by delivering electrostatic discharges when touching, removing, or inserting any objects inside the equipment housing.

To make sure you are not delivering high static voltages yourself:

- Handle ESD sensitive components on a properly grounded and protected ESD workbench. When this is not possible, ground yourself to the equipment chassis before touching the boards. Ground yourself with a wrist strap and a resistive connection cord. When neither of the above is possible, touch a conductive part of the equipment chassis with your other hand before touching the boards.
- Always hold the boards by the edges and avoid touching the component contacts.

Regulatory Compliances

The WMS301 and WMS302 sensors comply with the following performance and environmental test standards:

- Mechanical vibration test per 1EC-68-2-6 Fc
- RF field emission test per EN 55022 Class B
- Conducted immunity tests
    - Electrostatic discharge EN61000-4-2
    - RF field immunity EN6100-4-3
    - Fast transient burst EN61000-4-4

Warranty

For certain products Vaisala normally gives a limited one-year warranty. Please observe that any such warranty may not be valid in case of damage due to normal wear and tear, exceptional operating conditions, negligent handling or installation, or unauthorized modifications. Please see the applicable supply contract or Conditions of Sale for details of the warranty for each product.

CHAPTER 2

PRODUCT OVERVIEW

This chapter introduces the WMS301 and WMS302 Combined Wind Sensor features.

Introduction to WMS Series Wind Sensors

WMS series wind sensors are compact sized instruments with the wind speed and direction sensors integrated into one unit. The sensor electronics is located inside a watertight compartment providing full protection against water, dust, pollutants, and electromagnetic interference.

The cup wheel shape, dimensions, and material have been carefully designed to achieve maximum measurement quality. The conical cups have been tested to give linear response between wind speed and angular velocity of the cup wheel. The polyamide plastic reinforced with carbon fiber guarantees a rigid structure even at the highest wind speeds.

The anemometer ball bearing assembly is composed of a wheel shaft, a pair of low friction ball bearings, and a shaft fixed magnet. A reed relay with electronics located in the body of the sensor converts the cup wheel rotation to pulses. Therefore, when properly supplied the sensor can be read practically with any data logger, either by counting the number of pulses within a fixed time period or measuring the time between successive transients. In the latter method

averaging of transient intervals should be used, since two pulses with non-symmetric positioning are generated during one revolution.

The balanced wind vane is integrated in the housing, underneath the cup wheel. The circular tail is located far enough from the body and the cup wheel to avoid turbulence due to these structures. The vane assembly is made of PA reinforced with glass fiber providing durable and lightweight structure with fast response and low inertia.

The angular position of the vane is detected using an axial symmetric rotating potentiometer. The potentiometer features low starting and running torque, linear arc-to-resistance transfer ratio, and long operation life.

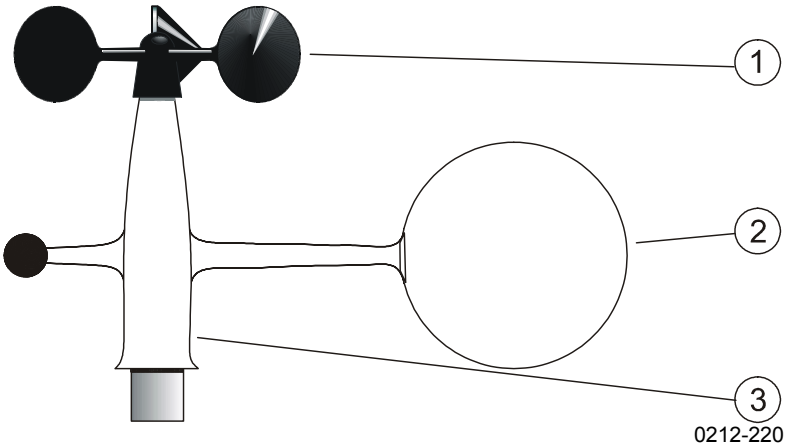

Figure 1 WMS Series Combined Wind Sensor

The following numbers refer to Figure 1 above:

1 = The cup wheel assembly
2 = The vane assembly
3 = The sensor compartment

WMS301 is equipped with a one-wiper type potentiometer with an open gap of only 5 degrees. With constant voltage applied to the potentiometer, the output voltage is directly proportional to the azimuth angle.

WMS302 has a two-wiper type potentiometer to overcome the wind direction discontinuity. However, a more complex voltage-to-direction conversion process is needed.

Product Nomenclature

Table 2 WMS Series Wind Sensor Nomenclature

	Code	Common Name
Basic	WMS301	Combined Wind Sensor with one wiper potentiometer
	WMS302	Combined Wind Sensor with two wiper potentiometers
Options	WMS30KIT	Installation Accessories to be used with pole masts

This page intentionally left blank.

CHAPTER 3

INSTALLATION

This chapter provides you with information that is intended to help you install the wind sensor.

Selecting Location

Allow sufficient clearance for the wind sensor. Install the wind sensor away from buildings or any other objects that might affect the airflow.

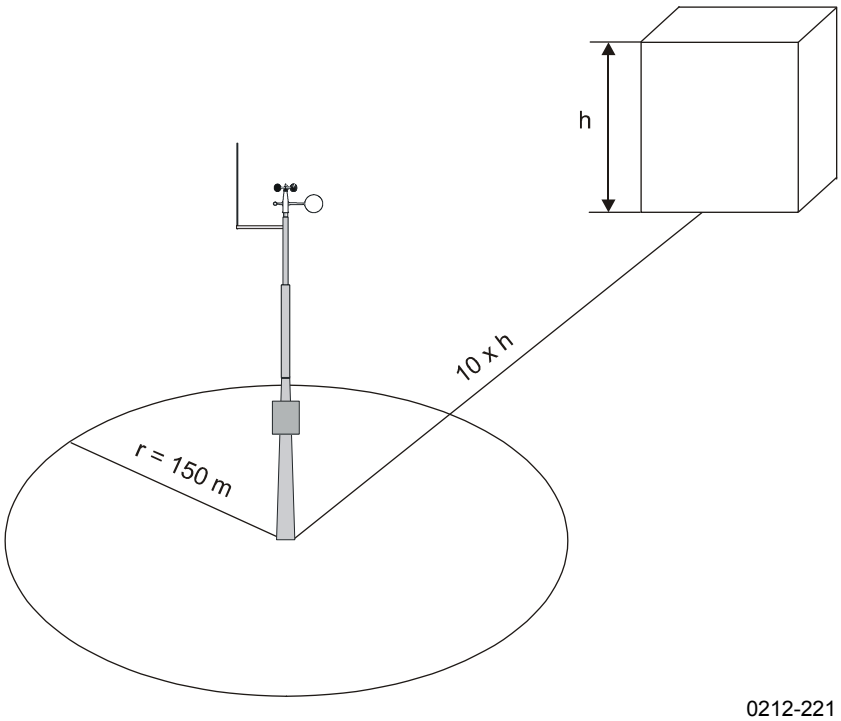

Figure 2 Recommended Mast Location in Open Area

In general, any object of height (h) will not remarkably disturb the wind measurement at a minimum distance of 10 × h. There should be at least 150 m open area to all directions from the mast. Refer to Figure 2 on page 11.

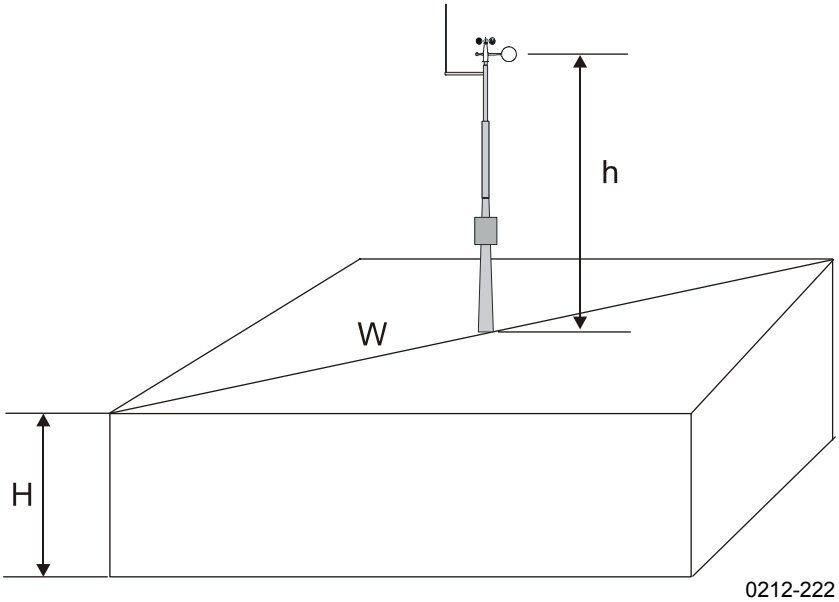

Figure 3 Recommended Mast Length on the Top of a Building

The recommended minimum length (h in Figure 3 above) for the mast that is installed on the top of a building is 1.5 times the height of the building (H). When the diagonal (W) is less than the height (H) the minimum length of the mast is 1.5 × W.

Connector

The WMS301 connector is shown in Figure 4 on page 13. The WMS302 connector is shown in Figure 5 on page 13. Type M12 female connector, for example, made by Lumberg, Phoenix, or Binder is suitable for connecting the cable to the sensor.

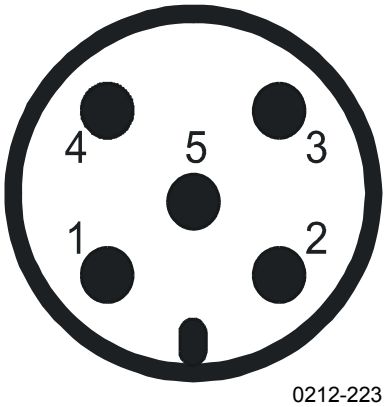

Figure 4 WMS301 Connector

The following numbers refer to Figure 4 above.

1 = +Vref, voltage input
2 = DIR, signal output, wind direction
3 = GND, ground
4 = GND, ground
5 = SPD, signal output, wind speed

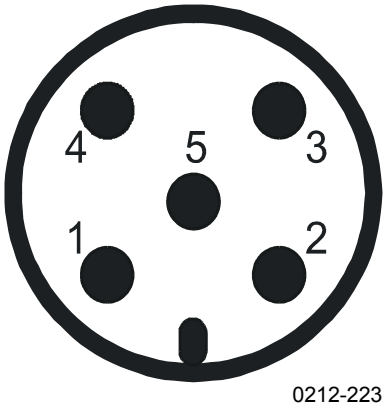

Figure 5 WMS302 Connector

The following numbers refer to Figure 5 above.

1 = +Vref, voltage input
2 = DIR1, signal output, wind direction
3 = GND, ground
4 = DIR2, signal output, wind direction
5 = SPD, signal output, wind speed

A pull up resistor, for example, 10 kΩ, is needed at SPD output to supply the anemometer electronics. It is recommended to use a Schmitt-trigger input with the SPD signal.

Installation Procedure

Initial Check

After you have unpacked the sensor, check for any signs of shipping damage. Also test that the vane and cup wheel rotate without friction.

Before installation, use an ohmmeter to check the proper operation of speed (SPD) and direction (DIR1 and DIR2) outputs while rotating the cup wheel and vane slowly. For measuring the direction, note that 10 kΩ/360º and 10 kΩ/180° potentiometers are used with WMS301 and WMS302 respectively. For the principal circuit diagrams, refer to Figure 6 below and Figure 7 on page 15.

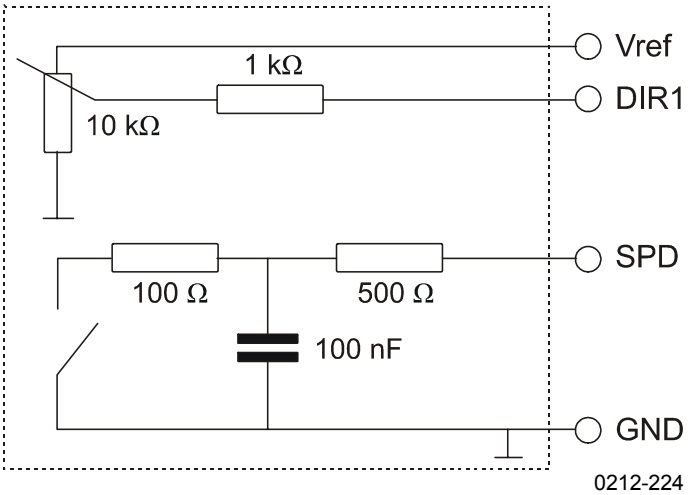

Figure 6 WMS301 Principal Circuit Diagram

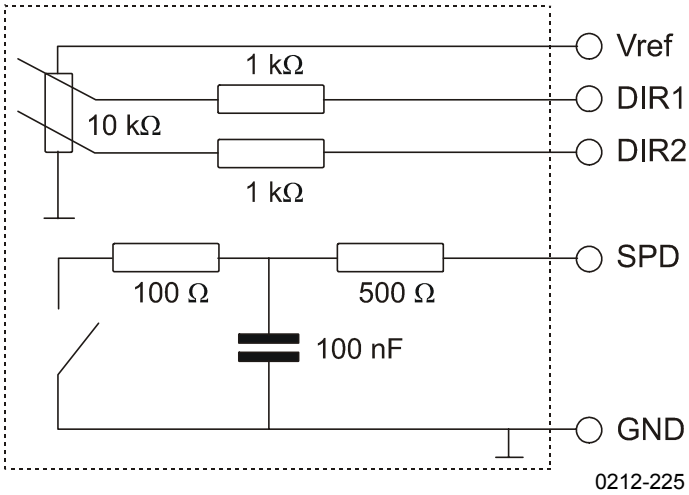

Figure 7 WMS302 Principal Circuit Diagram

The WMS302 sensor is aligned at the factory according to Figure 8 below. This factory alignment applies to all models with the alignment sleeve. The alignment sleeve is secured with a small size Allen bolt to the sensor body.

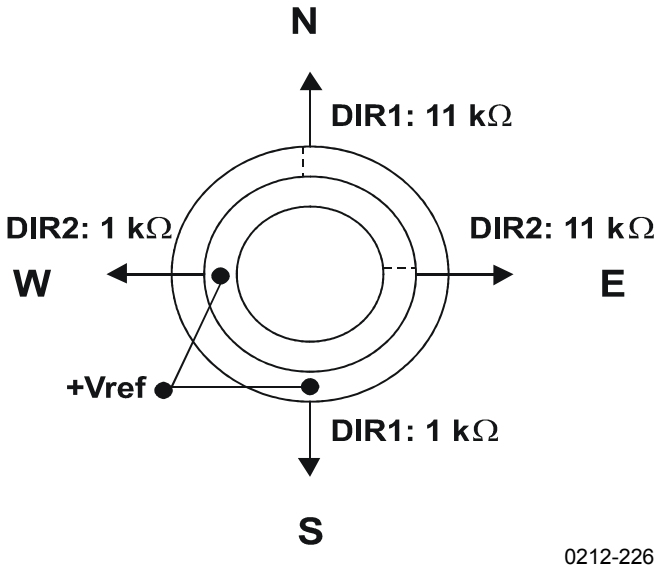

Figure 8 WMS302 Factory Alignment (Models with the Alignment Sleeve)

Mounting

Mounting Sensor to the Wind Sensor Mast

After a proper location for wind measurement has been selected, you can mount the sensor to the wind sensor mast. The diameter of the wind sensor mast is 30 mm. To mount the sensor, do the following:

1. Fit the cable (number 2 in Figure 9 below) through the mounting piece (3) and connect the cable to the sensor.

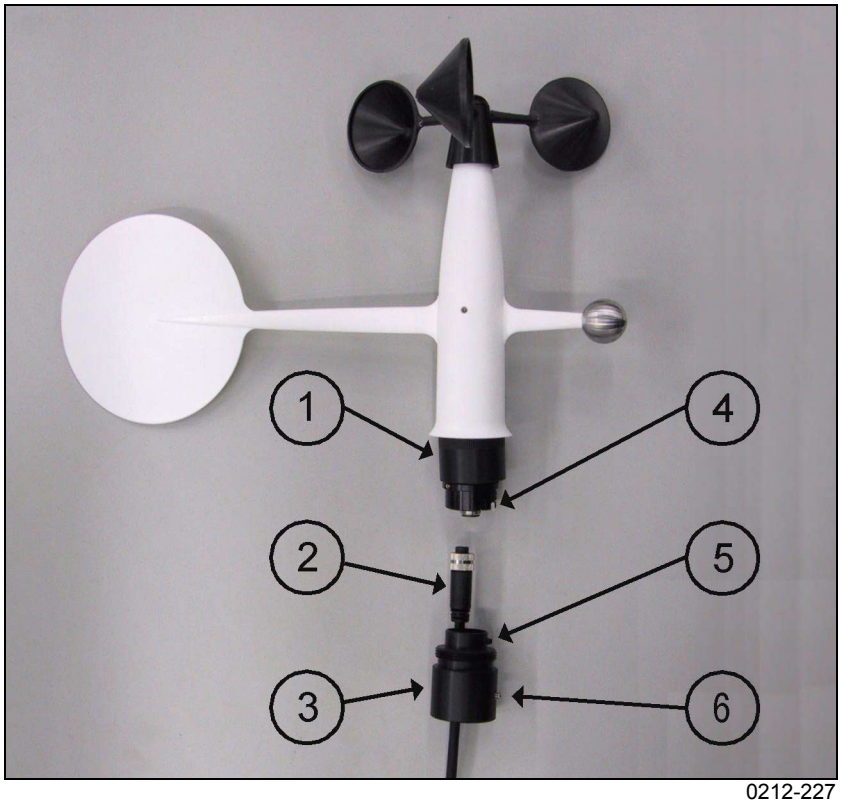

0212-227

Figure 9 Mounting of the Combined Wind Sensor

2. Place the mounting piece (3) on the top of the mast and align the tap (5) to north.
3. Align the notch (4) to the tap (5) and attach the sensor to the mounting piece with the plastic collar (1).

4. Secure the mounting piece (3) to the mast by tightening the mounting screw (6).
5. Route the sensor cable down along the mast and always attach the cable to the mast with cable ties.
6. Mount the wind sensor mast firmly to a solid base, for example, to a pole mast.
7. Connect the signal cable to a data logger or display device.

Mounting to a Pole Mast with WMS30KIT

You can mount the wind sensor with a mast on the top of a pole mast using WMS30KIT. When the mast is high, use a combined wind sensor with a 10 m cable. You can mount the wind sensor mast to a metallic or wooden mast.

WARNING	Do not install the wind sensor above the top of the lightning protection rod.

To mount the wind sensor mast to a metallic mast, do the following (the numbers refer to Figure 10 on page 18):

1. Install the plastic protective plate (5) between the mast (6) and the mounting piece.
2. Attach the mounting piece to the mast (6) using the large clamps.
3. Attach the wind sensor mast with the wind sensor (1) to the mast (6) using the smaller clamps.
4. Secure the cable with the fixed cable tie (3) to the wind sensor mast.
5. Route the sensor cable down along the mast and always attach the cable to the mast with cable ties.
6. Connect the signal cable to a data logger or display device.

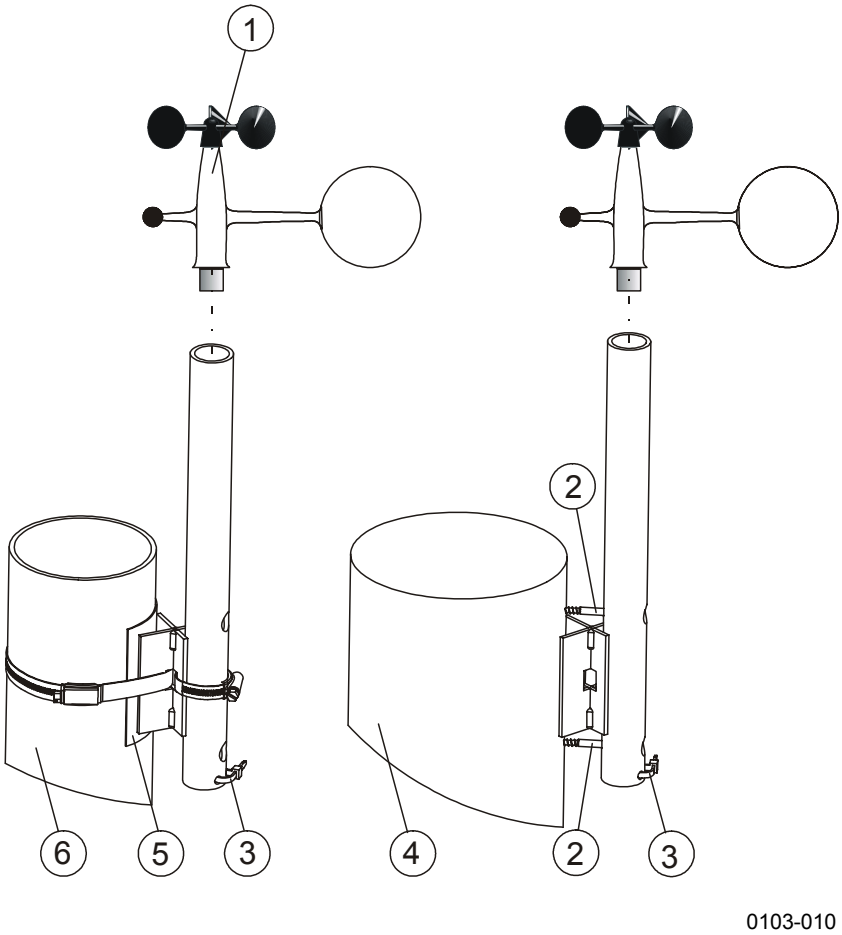

Figure 10 WMS301/WMS302 Installation with WMS30KIT

The following numbers refer to Figure 10 above:

1 = WMS301 or WMS302
2 = Wood screws
3 = Cable tie
4 = Wooden mast
5 = Plastic protective plate
6 = Pole mast

To mount the wind sensor mast to a wooden mast, do the following (the numbers refer to Figure 10 on page 18):

1. Attach the mounting piece with the wood screws (2) to the wooden mast (4) through the wind sensor mast.
2. Secure the cable with the fixed cable tie (3) to the wind sensor mast.
3. Route the sensor cable down along the mast and always attach the cable to the mast with cable ties.
4. Connect the signal cable to a data logger or display device.

Aligning the Sensor

If you need to align the combined wind sensor, use the data logger or display device to monitor the instant wind direction. To align the combined wind sensor, do the following (numbers refer to Figure 11 below):

1. Place the mounting piece (2) on the top of the wind sensor mast and attach the sensor to the mounting piece (4) with the plastic collar (3).

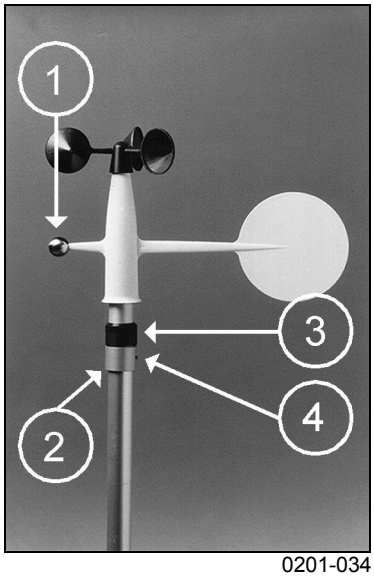

0201-034

Figure 11 Aligning the Combined Wind Sensor

2. Choose a known wind direction reference point on the horizon with the help of a compass.
3. Point the nose (1) of the vane at the reference point.
4. Hold the vane in position and slowly rotate the mounting piece (4) until wind direction shows proper value.
5. Secure the mounting piece (4) to the mast by tightening the mounting screw.

CHAPTER 4

MAINTENANCE

This chapter provides information that is needed in basic maintenance of the product.

Periodic Maintenance

Testing Proper Operation

It is recommended to check the ball bearings of the anemometer and the vane every year. If the cup wheel or the vane is not rotating smoothly or it creates detectable noise, the bearings must be replaced.

Replacing Consumables

Only a trained technician should replace the bearings.

If your sensor includes the alignment sleeve and the factory alignment has not been altered, you can simply remove and remount the sensor to its place with the plastic collar without realigning.

To replace the ball bearings, do the following (the numbers refer to Figure 12 on page 23):

Anemometer bearings:

1. Loosen the hubnut (14) with fingers or a 10 mm tool and remove the cup wheel (13).
2. Remove the ball bearing assembly (12) by unscrewing it counterclockwise (with a 10 mm tool).
3. Insert a new bearing assembly (12). Tighten gently.
4. Fasten the cup wheel to the sensor. Tighten gently.

Vane bearings:

1. Proceed as described in steps 1 and 2 above.
2. Open the lock screw (11) of the tail assembly (10) and remove the screw.
3. Remove the Seeger-ring (9) (with narrow point pliers).
4. Remove the bearing assembly (8).
5. Replace the bearings inside the housing with new ones.
6. Assemble the sensor in the reverse work order.

Note that part number 6 in Figure 12 on page 23 consists of two parts. The lower portion has a notch that is aligned at the factory in relation to the output of the potentiometer to point north when the sensor is mounted.

The following numbers refer to Figure 12 on page 23:

1	=	Casing
2a	=	Reed switch PCB
2b	=	Potentiometer PCB
3	=	Retainer
4	=	Sleeve
5	=	O-ring
6	=	Base part
7	=	Mast adapter sleeve
8	=	Bearing assembly
9	=	Seeger ring

10 = Tail assembly
11 = Lock screw
12 = Bearing assembly
13 = Cup wheel
14 = Hubnut

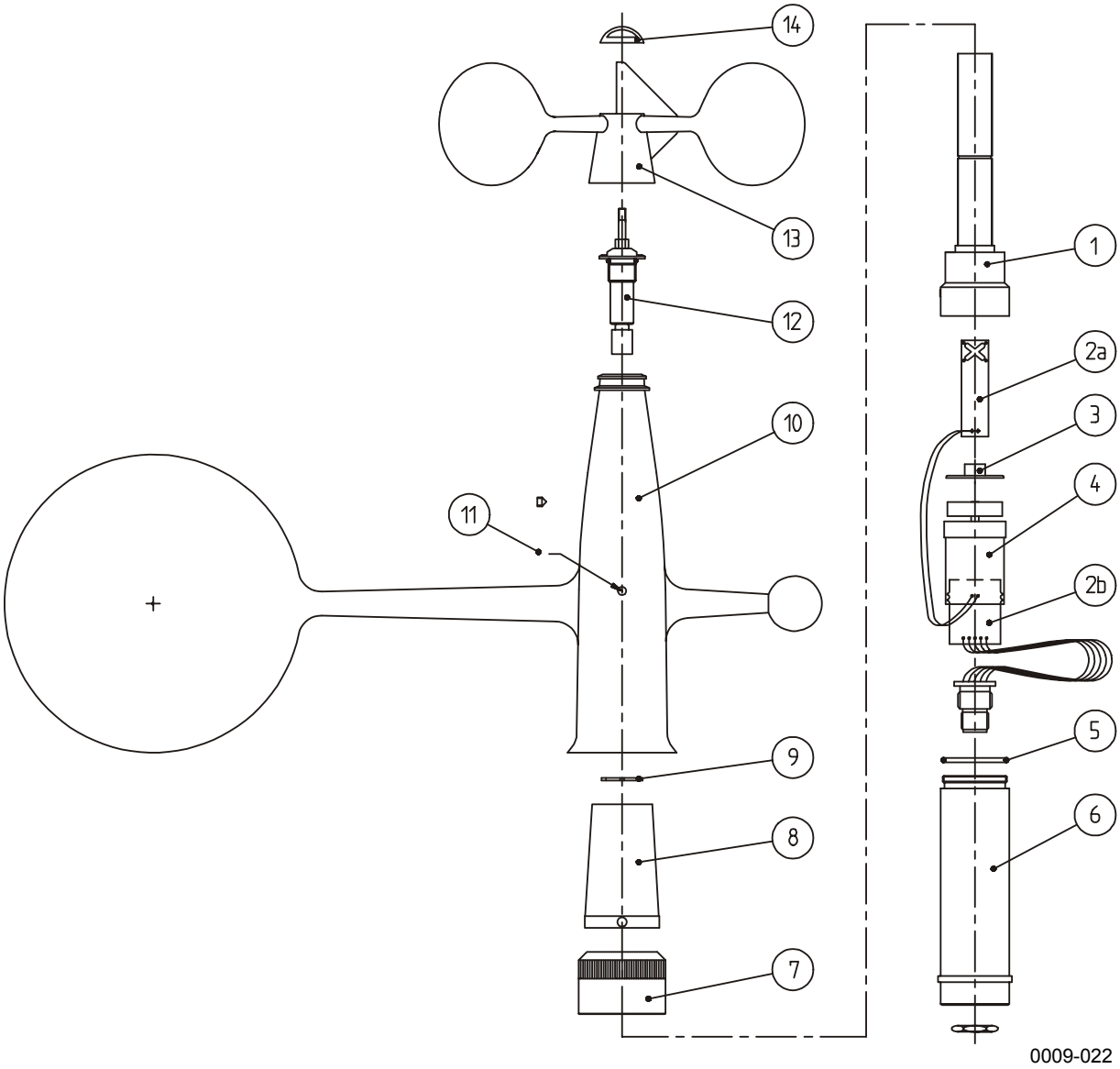

Figure 12 WMS Assembly

Parts List for Consumables

Table 3 Available Spare Parts

Spare Part	Order Code
Cup wheel assembly	WA45233
Anemometer bearing assembly	WA45232
Vane assembly	WA35234
Set of bearings	25160WA

CHAPTER 5
TROUBLESHOOTING

This chapter describes common problems, their probable causes and remedies, and contact information.

Common Problems

Table 4 Some Common Problems and their Remedies

Problem	Probable Cause	Remedy
The data is not received from the sensor.	The sensor is mechanically damaged.	Check the cables and connectors.
	The sensor is not powered properly.	Check that the supply voltage is 3 to 15 VDC

Technical Support

For technical questions, contact the Vaisala technical support:

E-mail helpdesk@vaisala.com

Telephone +358 9 8949 2789

Fax +358 9 8949 2790

Return Instructions

If the product needs repair, please follow the instructions below to speed up the process and avoid extra costs.

1. Read the warranty information.
2. Write a Problem Report with the name and contact information of a technically competent person who can provide further information on the problem.
3. On the Problem Report, please explain:
   - What failed (what worked / did not work)?
   - Where did it fail (location and environment)?
   - When did it fail (date, immediately / after a while / periodically / randomly)?
   - How many failed (only one defect / other same or similar defects / several failures in one unit)?
   - What was connected to the product and to which connectors?
   - Input power source type, voltage and list of other items (lighting, heaters, motors etc.) that were connected to the same power output.
   - What was done when the failure was noticed?
4. Include a detailed return address with your preferred shipping method on the Problem Report.
5. Pack the faulty product using an ESD protection bag of good quality with proper cushioning material in a strong box of adequate size. Please include the Problem Report in the same box.
6. Send the box to:
   Vaisala Oyj
   SSD Service
   Vanha Nurmijärventie 21
   FIN-01670 Vantaa
   Finland

CHAPTER 6

TECHNICAL DATA

This chapter provides the technical data of WMS301 and WMS302 Combined Wind Sensor.

Specifications

Table 5 Anemometer Specifications

Property	Description/Value
Sensor / Transducer type	Dual Reed switch
Measuring range	0.5 ... 60 m/s
Starting threshold	< 0.4 m/s
Distance constant	2 m
Transducer output	1 Hz ~ 0.7 m/s
Accuracy (≤ 10 m/s) (> 10 m/s)	 ± 0.3 m/s error < 2 %
Transfer function, where U = wind speed [m/s] F = output frequency [Hz]	U = - 0.24 + F × 0.699

Table 6 Vane Specifications

Property	Description/Value
Sensor / Transducer type	Potentiometer
Measuring range WMS302 WMS301	 0 ... 360° 0 ... 355°
Starting threshold	< 1.0 m/s
Damping ratio	0.3
Overshoot ratio	0.4
Delay distance	0.6 m
Accuracy	Better than ± 3°

Table 7 Common Specifications

Property	Description/Value
Supply voltage	3 ... 15 VDC
Electrical connections	5-pin male with 12 mm threads
Body material	AlMgSi, gray anodized
Cup material	PA, reinforced with carbon fiber; black
Vane material	PA, reinforced with glass fiber, white
Operating temperature	- 40 ... + 55 °C (-40 ... +131°F)
Storage temperature	- 60 ... + 65 °C (-76 ... +149°F)
Dimensions	265 (h) × 360 (w) mm (10.4 (h) × 14.2 (w) in)
Weight	360 g (12.7 oz)

Dimensions

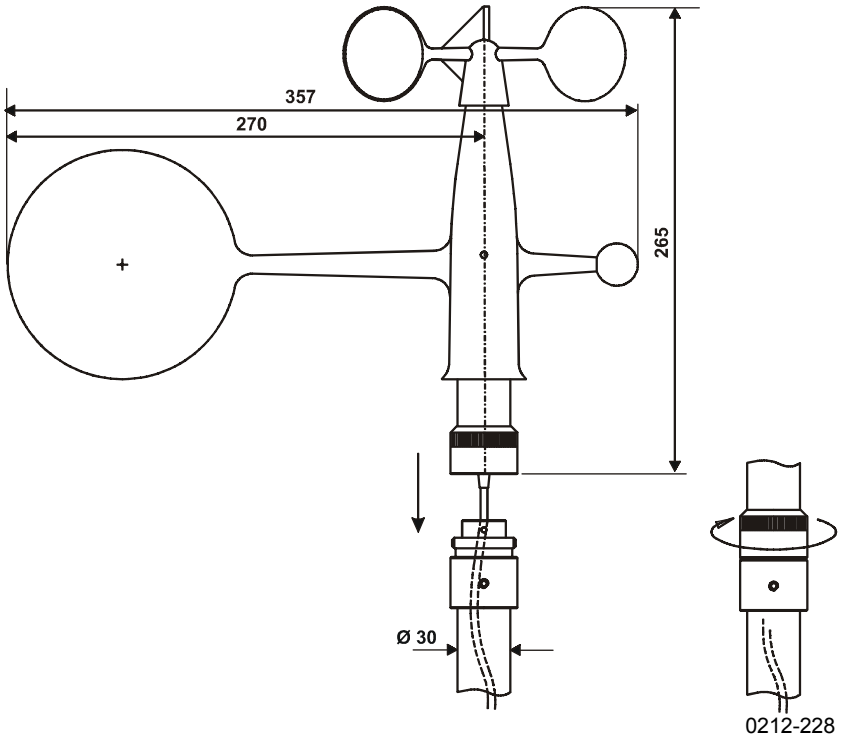

Figure 13 Dimensions (in mm) of the Combined Wind Sensor

MTBF

The calculated mean time between failure is 4.4×10^5 h for permanent installations. The value equals to 2.27 when expressed in a failure frequency during 10^6 hours of use.

MTTR

Mean time to repair is 0.2 h.